DRUTEX S.A.

IGLO EDGE TILT & TURN WINDOW (WZ3)(IMPACT)

GENERAL NOTES:

1. THE PRODUCT SHOWN HEREIN IS DESIGNED AND MANUFACTURED TO COMPLY WITH THE CURRENT EDITION OF THE FLORIDA BUILDING CODE (FBC), **EXCLUDING** HVHZ AND HAS BEEN EVALUATED ACCORDING TO THE FOLLOWING:
   - AAMA/WDMA/CSA 101/I.S.2/A440-22
   - ASTM E1886-19
   - ASTM E1996-23
2. ADEQUACY OF THE EXISTING STRUCTURAL CONCRETE/MASONRY, 2X FRAMING, AND METAL FRAMING AS A MAIN WIND FORCE RESISTING SYSTEM CAPABLE OF WITHSTANDING AND TRANSFERRING APPLIED PRODUCT LOADS TO THE FOUNDATION IS THE RESPONSIBILITY OF THE ENGINEER OR ARCHITECT OF RECORD FOR THE PROJECT OF INSTALLATION.
3. 1X AND 2X BUCKS (WHEN USED) SHALL BE DESIGNED AND ANCHORED TO PROPERLY TRANSFER ALL LOADS TO THE STRUCTURE. BUCK DESIGN AND INSTALLATION IS THE RESPONSIBILITY OF THE ENGINEER OR ARCHITECT OF RECORD FOR THE PROJECT OF INSTALLATION.
4. INSTALL INDIVIDUAL INSTALLATION ANCHORS WITHIN A TOLERANCE OF ±1/2 INCH OF THE DEPICTED LOCATION IN THE ANCHOR LAYOUT DETAIL (I.E., WITHOUT CONSIDERATION OF TOLERANCES). TOLERANCES ARE NOT CUMULATIVE FROM ONE INSTALLATION ANCHOR TO THE NEXT.
5. THE INSTALLATION DETAILS DESCRIBED HEREIN ARE GENERIC AND MAY NOT REFLECT ACTUAL CONDITIONS FOR A SPECIFIC SITE. IF SITE CONDITIONS CAUSE INSTALLATION TO DEVIATE FROM THE REQUIREMENTS DETAILED HEREIN, A LICENSED ENGINEER OR ARCHITECT SHALL PREPARE SITE SPECIFIC DOCUMENTS FOR USE WITH THIS DOCUMENT.
6. APPROVED IMPACT PROTECTIVE SYSTEM **IS NOT REQUIRED** ON THIS PRODUCT IN AREAS REQUIRING IMPACT RESISTANCE IN WIND ZONE 3 OR LESS.
7. APPROVED IMPACT PROTECTIVE SYSTEM **IS REQUIRED** ON THIS PRODUCT IN AREAS REQUIRING IN IMPACT RESISTANCE IN WIND ZONE 4.
8. WINDOW FRAME MATERIAL: uPVC
9. GLASS MEETS THE REQUIREMENTS OF ASTM E1300 GLASS CHARTS. SEE SHEET 1 FOR GLAZING DETAIL.

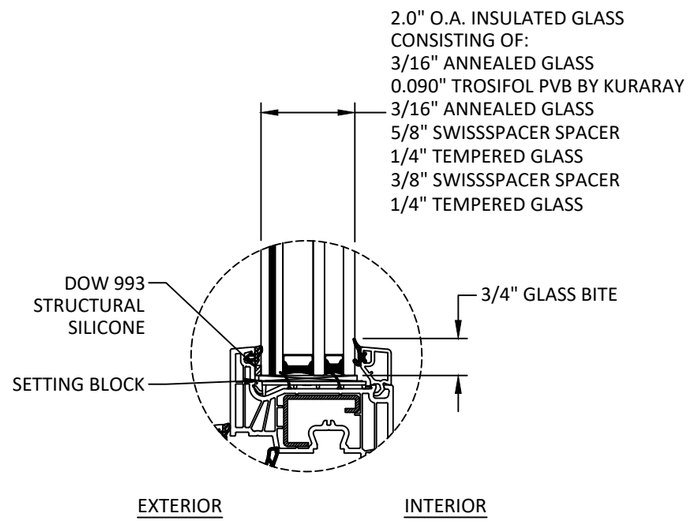

GLAZING DETAIL 1

GLAZING NOTES:
1. GLASS TYPE COMPLIES WITH ASTM E1300 REQUIREMENTS. PER THE FBC TEMPER AND SAFETY GLAZING REQUIREMENTS SHALL BE REVIEWED ON A SITE SPECIFIC BASIS.
2. SETTING BLOCK DUROMETER HARDNESS OF 70-90 (SHORE A) AS REFERENCED IN FBC CHAPTER 24.
3. SETTING BLOCKS TO BE LOCATED AT 1/4 SPAN LENGTH FOR GLASS WIDER THAN 36" AS PER FBC CHAPTER 24.
4. D.L.O. AND DESIGN PRESSURES MAY NOT EXCEED MAX VALUES SHOWN HEREIN.

TABLE OF CONTENTS

SHEET	SHEET DESCRIPTION
1	GENERAL NOTES & GLAZING DETAIL
2	ELEVATION & DESIGN PRESSURE TABLE
3	ANCHOR LAYOUT
4	VERTICAL SECTIONS
5	HORIZONTAL SECTIONS
6	ANCHOR DETAILS, ANCHOR SCHEDULE, & INSTALLATION NOTES

DESIGN PRESSURE RATING (PSF)

CONFIGURATION	WIDTH (IN.)	HEIGHT (IN.)	DESIGN PRESSURE	MISSILE IMPACT RATING
X	SEE TABLE ON SHEET 2			LARGE AND SMALL MISSILE IMPACT

DRUTEX ENGINEERED FOR YOU
LESZKA GIERSZEWSKIEGO 1, 77-100
BYTOW, POLAND
PH: +48-59-822-9101 FX: +48-59-822-9103

TITLE: *IGLO EDGE TILT & TURN WINDOW (WZ3) (IMPACT)*
GENERAL NOTES & GLAZING DETAIL

PREPARED BY:
BUILDING DROPS, INC.
1900 NE MIAMI COURT, STE. 2-15
MIAMI, FL 33132
PH: (954)399-8478
FAX: (954)744.4738
WEB: www.buildingdrops.com

REMARKS	BY	DATE
2026 FBC UPDATE	LS	06/26

THE INSTALLATION DETAILS DESCRIBED HEREIN ARE GENERIC AND MAY NOT REFLECT ACTUAL CONDITIONS FOR A SPECIFIC SITE. IF SITE CONDITIONS CAUSE INSTALLATION TO DEVIATE FROM THE REQUIREMENTS DETAILED HEREIN, A LICENSED ENGINEER OR ARCHITECT SHALL PREPARE SITE SPECIFIC DOCUMENTS FOR USE WITH THIS DOCUMENT.

Digitally signed by Hermes F. Norero, P.E.
Reason: I am approving this document
Date: 2026.08.07 10:31:54 -04'00'

HERMES F. NORERO
LICENSE
No. 73778
STATE OF
FLORIDA
PROFESSIONAL ENGINEER

HERMES F. NORERO, P.E.
FLORIDA P.E. No. 73778
BUILDING DROPS, INC.
1900 NE MIAMI CT. SUITE 2-15
MIAMI, FL 33132
FBPE CERT. OF AUTHORIZATION No. 29578

FL #: FL48218

DATE: 05.20.2026

DWG. BY: JR | CHK. BY: HFN

SCALE: NTS

DWG. #: DRU071

SHEET: 1 OF 6 | REV. A

7/13/2026 11:36 AM
c:\users\lucianosanchez\building drops, inc\building drops landing - documents\common\projects\2026 code change projects\drutex, s.a\cc-26-0527.1 - 2026 code change - 1711\dwgs\fl48218\dru071.dwg

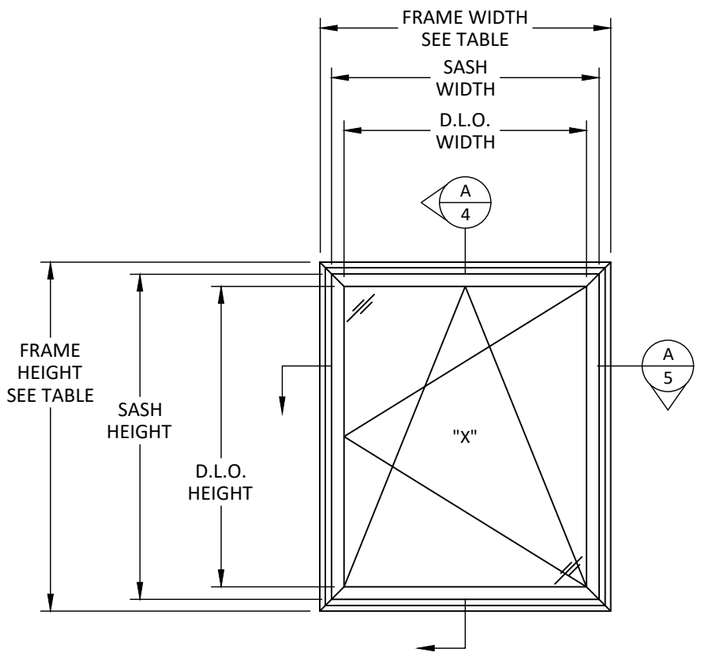

ELEVATION

TILT & TURN WINDOW

SASH HEIGHT = FRAME HEIGHT - 3.02"
SASH WIDTH = FRAME WIDTH - 3.03"

D.L.O. HEIGHT = FRAME HEIGHT - 8.97"
D.L.O. WIDTH = FRAME WIDTH - 8.98"

DESIGN PRESSURE CHART (PSF)

FRAME WIDTH (IN.)	FRAME HEIGHT (IN.)	EXT. (+)	INT. (-)
30	48	70.00	70.00
	54	70.00	70.00
	60	70.00	70.00
	66	70.00	70.00
	72	70.00	70.00
	78	70.00	70.00
	84	70.00	70.00
	90	67.54	67.54
	96	55.57	55.57
	102	46.28	46.28
	108	38.95	38.95
	114	33.09	33.09
	120	28.35	28.35
	126	24.48	24.48
	132	21.28	21.28
	138	18.61	18.61
	144	16.38	16.38
36	48	70.00	70.00
	54	70.00	70.00
	60	70.00	70.00
	66	70.00	70.00
	72	70.00	70.00
	78	70.00	70.00
	84	69.73	69.73
	90	56.56	56.56
	96	46.51	46.51
	102	38.71	38.71
	108	32.57	32.57
	114	27.66	27.66
	120	23.69	23.69
42	48	70.00	70.00
	54	70.00	70.00
	60	70.00	70.00
	66	70.00	70.00
	72	70.00	70.00
	78	70.00	70.00
	84	60.17	60.17
	90	48.76	48.76
	96	40.07	40.07
	102	33.33	33.33

DESIGN PRESSURE CHART (PSF)

FRAME WIDTH (IN.)	FRAME HEIGHT (IN.)	EXT. (+)	INT. (-)
48	48	70.00	70.00
	54	70.00	70.00
	60	70.00	70.00
	66	70.00	70.00
	72	70.00	70.00
	78	66.62	66.62
	84	53.06	53.06
	90	42.96	42.96
54	48	70.00	70.00
	54	70.00	70.00
	60	70.00	70.00
	66	70.00	70.00
	72	70.00	70.00
	78	59.83	59.83
60	48	70.00	70.00
	54	70.00	70.00
	60	70.00	70.00
	66	70.00	70.00
	72	70.00	70.00
66	48	70.00	70.00
	54	70.00	70.00
	60	70.00	70.00
72	48	70.00	70.00
	54	70.00	70.00
	60	70.00	70.00
78	48	70.00	70.00
	54	70.00	70.00
84	48	70.00	70.00
90	48	70.00	70.00

DRUTEX
ENGINEERED FOR YOU
LESZKA GIERSZEWSKIEGO 1, 77-100
BYTOW, POLAND
PH: +48-59-822-9101 FX: +48-59-822-9103

TITLE: *IGLO EDGE TILT & TURN WINDOW (WZ3) (IMPACT)*
ELEVATION & DESIGN PRESSURE TABLE

PREPARED BY:
BUILDING DROPS, INC.
1900 NE MIAMI COURT, STE. 2-15
MIAMI, FL 33132
PH: (954)399-8478
FAX: (954)744.4738
WEB: www.buildingdrops.com

REMARKS	BY	DATE
2026 FBC UPDATE	LS	06/26

THE INSTALLATION DETAILS DESCRIBED HEREIN ARE GENERIC AND MAY NOT REFLECT ACTUAL CONDITIONS FOR A SPECIFIC SITE. IF SITE CONDITIONS CAUSE INSTALLATION TO DEVIATE FROM THE REQUIREMENTS DETAILED HEREIN, A LICENSED ENGINEER OR ARCHITECT SHALL PREPARE SITE SPECIFIC DOCUMENTS FOR USE WITH THIS DOCUMENT.

HERMES F. NORERO
LICENSE
No. 73778
STATE OF
FLORIDA
PROFESSIONAL ENGINEER

HERMES F. NORERO, P.E.
FLORIDA P.E. No. 73778
BUILDING DROPS, INC.
1900 NE MIAMI CT. SUITE 2-15
MIAMI, FL 33132
FBPE CERT. OF AUTHORIZATION No. 29578

FL #: FL48218

DATE: 05.20.2026

DWG. BY: JR | CHK. BY: HFN

SCALE: NTS

DWG. #: DRU071

SHEET: 2 OF 6 | REV. A

7/13/2026 11:36 AM
c:\users\lucianosanchez\building drops, inc\building drops landing - documents\common\projects\2026 code change projects\drutex, s.a\cc-26-0527.1 - 2026 code change - 1711\dwgs\fl48218\dru071.dwg

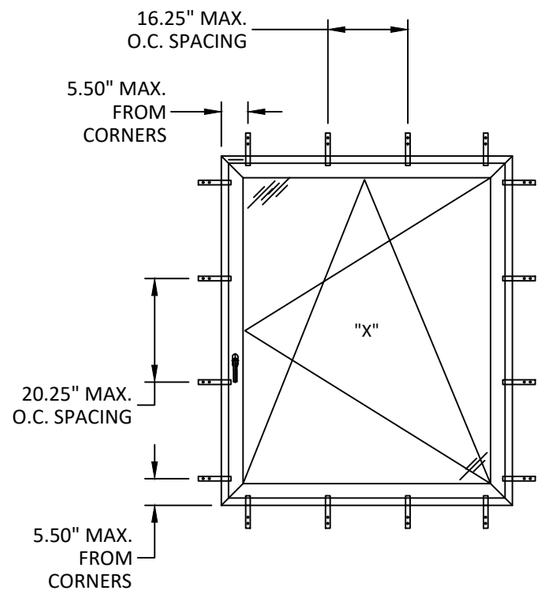

ANCHOR LAYOUT

TILT & TURN WINDOW - STRAP INSTALLATION

NOTE: TWO (2) INSTALLATION ANCHORS PER STRAP LOCATION.

DRUTEX
ENGINEERED FOR YOU

LESZKA GIERSZEWSKIEGO 1, 77-100
BYTOW, POLAND
PH: +48-59-822-9101 FX: +48-59-822-9103

TITLE: *IGLO EDGE TILT & TURN WINDOW (WZ3) (IMPACT)*

ANCHOR LAYOUT

PREPARED BY:
BUILDING DROPS, INC.
1900 NE MIAMI COURT, STE. 2-15
MIAMI, FL 33132
PH: (954)399-8478
FAX: (954)744.4738
WEB: www.buildingdrops.com
BUILDING DROPS

REMARKS	BY	DATE
2026 FBC UPDATE	LS	06/26

THE INSTALLATION DETAILS DESCRIBED HEREIN ARE GENERIC AND MAY NOT REFLECT ACTUAL CONDITIONS FOR A SPECIFIC SITE. IF SITE CONDITIONS CAUSE INSTALLATION TO DEVIATE FROM THE REQUIREMENTS DETAILED HEREIN, A LICENSED ENGINEER OR ARCHITECT SHALL PREPARE SITE SPECIFIC DOCUMENTS FOR USE WITH THIS DOCUMENT.

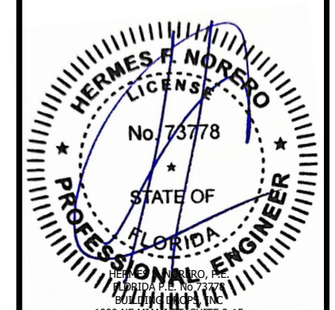

HERMES F. NORERO, P.E.
FLORIDA P.E. No. 73778
BUILDING DROPS, INC.
1900 NE MIAMI CT. SUITE 2-15
MIAMI, FL 33132
FBPE CERT. OF AUTHORIZATION No. 29578

FL #: FL48218

DATE: 05.20.2026

DWG. BY: JR

CHK. BY: HFN

SCALE: NTS

DWG. #: DRU071

SHEET: 3 OF 6

REV. A

7/13/2026 11:36 AM
c:\users\lucianosanchez\building drops, inc\building drops landing - documents\common\projects\2026 code change projects\drutex, s.a\cc-26-0527.1 - 2026 code change - 1711\dwgs\fl48218\dru071.dwg

7/13/2026 11:36 AM
c:\users\lucianosanchez\building drops, inc\building drops landing - documents\common\projects\2026 code change projects\drutex, s.a\gc-26-0527.1 - 2026 code change - 1711\dwgs\fl48218\dru071.dwg

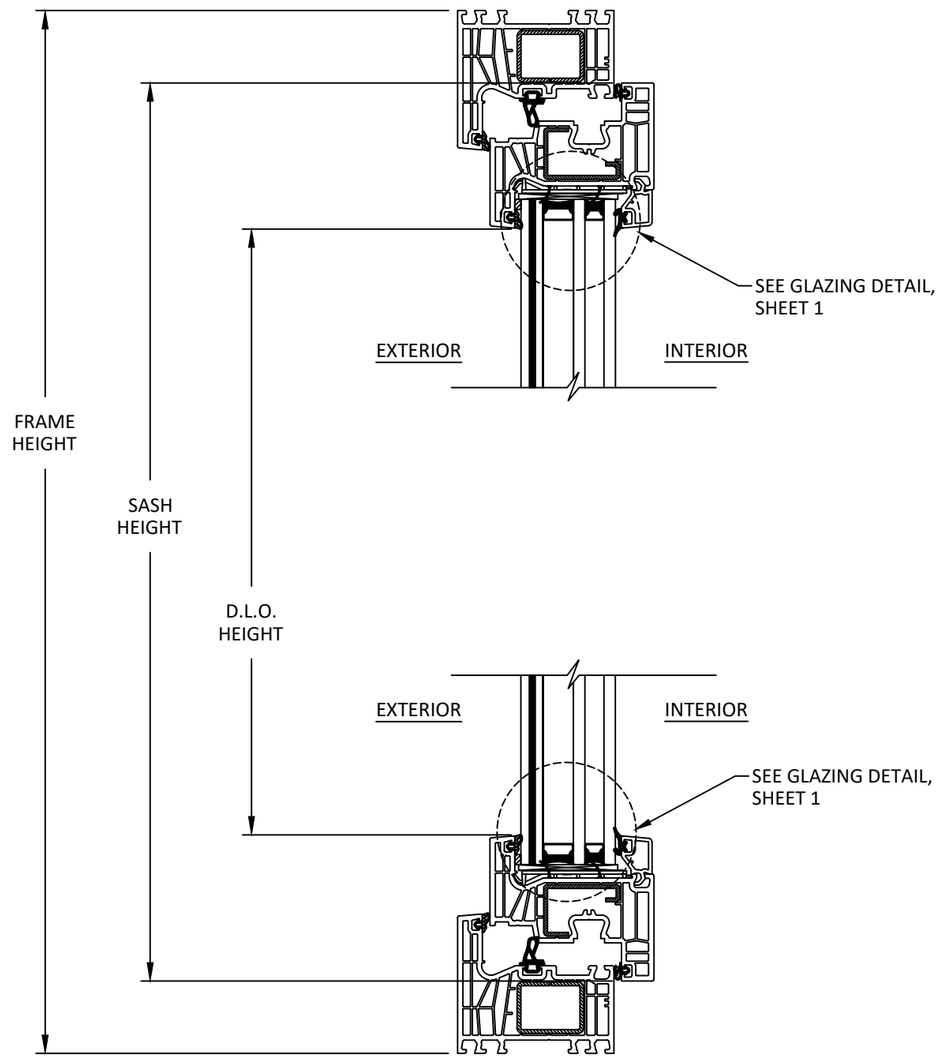

A/4 VERTICAL SECTION

TYP. HEAD AND SILL DETAIL

DRUTEX
ENGINEERED FOR YOU

LESZKA GIERSZEWSKIEGO 1, 77-100
BYTOW, POLAND
PH: +48-59-822-9101 FX: +48-59-822-9103

TITLE: *IGLO EDGE TILT & TURN WINDOW (WZ3) (IMPACT)*

VERTICAL SECTIONS

PREPARED BY:
BUILDING DROPS, INC.
1900 NE MIAMI COURT, STE. 2-15
MIAMI, FL 33132
PH: (954)399-8478
FAX: (954)744.4738
WEB: www.buildingdrops.com
BUILDING DROPS

REMARKS	BY	DATE
2026 FBC UPDATE	LS	06/26

THE INSTALLATION DETAILS DESCRIBED HEREIN ARE GENERIC AND MAY NOT REFLECT ACTUAL CONDITIONS FOR A SPECIFIC SITE. IF SITE CONDITIONS CAUSE INSTALLATION TO DEVIATE FROM THE REQUIREMENTS DETAILED HEREIN, A LICENSED ENGINEER OR ARCHITECT SHALL PREPARE SITE SPECIFIC DOCUMENTS FOR USE WITH THIS DOCUMENT.

HERMES F. NORERO
LICENSE
No. 73778
STATE OF
FLORIDA
PROFESSIONAL ENGINEER

HERMES F. NORERO, P.E.
FLORIDA P.E. No 73778
BUILDING DROPS, INC.
1900 NE MIAMI CT. SUITE 2-15
MIAMI, FL 33132
FBPE CERT. OF AUTHORIZATION No. 29578

FL #: FL48218

DATE: 05.20.2026

DWG. BY: JR

CHK. BY: HFN

SCALE: NTS

DWG. #: DRU071

SHEET: 4 OF 6

REV. A

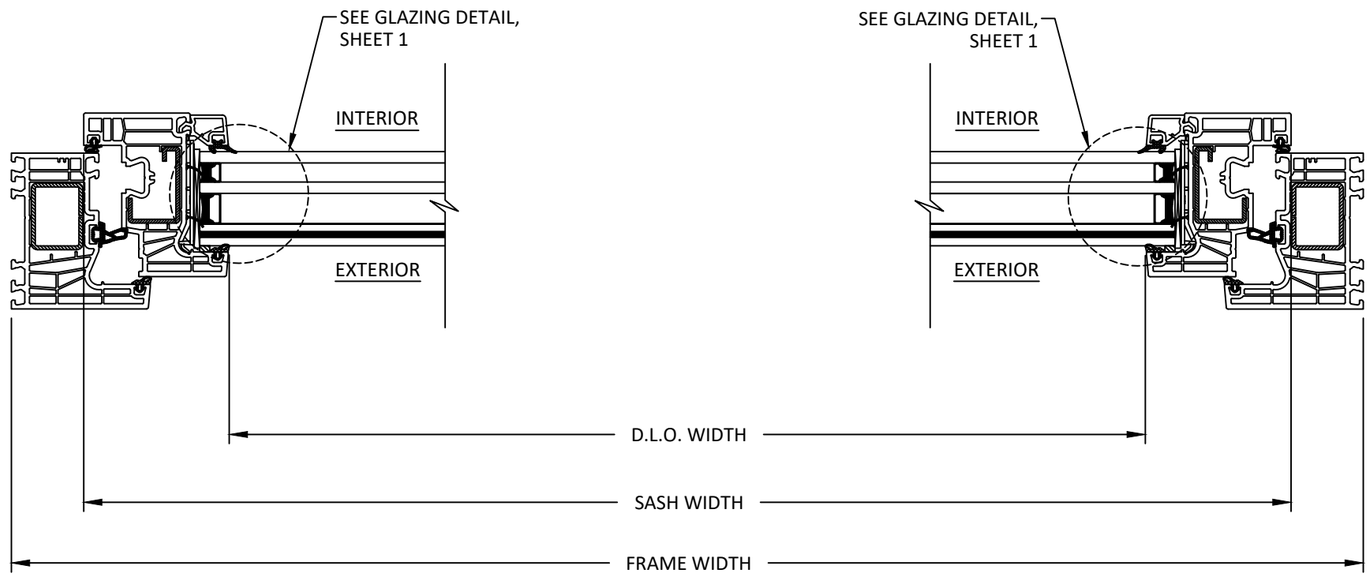

A/5 HORIZONTAL SECTION

TYP. JAMB DETAIL

DRUTEX
ENGINEERED FOR YOU

LESZKA GIERSZEWSKIEGO 1, 77-100
BYTOW, POLAND
PH: +48-59-822-9101 FX: +48-59-822-9103

TITLE: *IGLO EDGE TILT & TURN WINDOW (WZ3) (IMPACT)*

HORIZONTAL SECTIONS

PREPARED BY:
BUILDING DROPS, INC.
1900 NE MIAMI COURT, STE. 2-15
MIAMI, FL 33132
PH: (954)399-8478
FAX: (954)744.4738
WEB: www.buildingdrops.com

REMARKS	BY	DATE
2026 FBC UPDATE	LS	06/26

THE INSTALLATION DETAILS DESCRIBED HEREIN ARE GENERIC AND MAY NOT REFLECT ACTUAL CONDITIONS FOR A SPECIFIC SITE. IF SITE CONDITIONS CAUSE INSTALLATION TO DEVIATE FROM THE REQUIREMENTS DETAILED HEREIN, A LICENSED ENGINEER OR ARCHITECT SHALL PREPARE SITE SPECIFIC DOCUMENTS FOR USE WITH THIS DOCUMENT.

HERMES F. NORERO
LICENSE
No. 73778
STATE OF
FLORIDA
PROFESSIONAL ENGINEER

HERMES F. NORERO, P.E.
FLORIDA P.E. No 73778
BUILDING DROPS, INC.
1900 NE MIAMI CT. SUITE 2-15
MIAMI, FL 33132
FBPE CERT. OF AUTHORIZATION No. 29578

FL #: FL48218

DATE: 05.20.2026

DWG. BY: JR | CHK. BY: HFN

SCALE: NTS

DWG. #: DRU071

SHEET: 5 OF 6 | REV. A

7/13/2026 11:36 AM
c:\users\lucianosanchez\building drops, inc\building drops landing - documents\common\projects\2026 code change projects\drutex, s.a\cc-26-0527.1 - 2026 code change - 1711\dwgs\fl48218\dru071.dwg

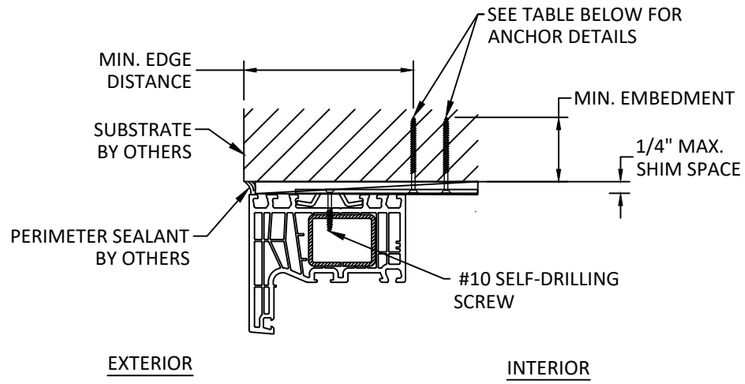

A/6 VERTICAL SECTION

HEAD - STRAP INSTALLATION
JAMB & SILL SIMILAR

INSTALLATION NOTES:

1. TWO (2) INSTALLATION ANCHORS ARE REQUIRED AT EACH ANCHOR LOCATION SHOWN, UNLESS OTHERWISE STATED ON SHEET 3.

2. INSTALL INDIVIDUAL INSTALLATION ANCHORS WITHIN A TOLERANCE OF ±1/2 INCH THE DEPICTED LOCATION & SPACING IN THE ANCHOR LAYOUT DETAILS (I.E., WITHOUT CONSIDERATION OF TOLERANCES). TOLERANCES ARE NOT CUMULATIVE FROM ONE INSTALLATION ANCHOR TO THE NEXT.

3. SHIM AS REQUIRED AT EACH INSTALLATION ANCHOR WITH LOAD BEARING SHIM(S). MAXIMUM ALLOWABLE SHIM STACK TO BE 1/4 INCH. SHIM WHERE SPACE OF 1/16 INCH OR GREATER OCCURS. SHIM(S) SHALL BE CONSTRUCTED OF HIGH DENSITY PLASTIC OR BETTER.

4. MINIMUM EMBEDMENT AND EDGE DISTANCE EXCLUDE WALL FINISHES, INCLUDING BUT NOT LIMITED TO STUCCO, FOAM, BRICK VENEER, AND SIDING.

5. INSTALLATION ANCHORS AND ASSOCIATED HARDWARE MUST BE MADE OF CORROSION RESISTANT MATERIAL OR HAVE A CORROSION RESISTANT COATING:

   - FASTENERS USED WITHIN 3,000 FEET OF A SALTWATER COASTLINE AND INSTALLED IN ENCLOSED SPACES SHALL BE GALVANIZED IN ACCORDANCE WITH SECTION 1711.1.1 (E.G., ASTM A153 CLASS D, ASTM A641 CLASS 3S, OR EQUIVALENT CORROSION RESISTANCE).

   - CONNECTORS AND METAL PLATES USED WITHIN 3,000 FEET OF A SALTWATER COASTLINE SHALL BE STANDARD GALVANIZED IN ACCORDANCE WITH SECTION 1711.1.2 (E.G., ASTM A653 G90, ASTM A123, OR PROTECTIVE COATING PER TPI 1).

6. FOR MASONRY OR CONCRETE OPENINGS, A 1X WOOD BUCK MAY BE USED (OPTIONAL) AS LONG AS THE MINIMUM EMBEDMENT AND EDGE DISTANCE REQUIREMENTS ARE STILL MET WITHIN THE CORRESPONDING HOST SUBSTRATE. SEE GENERAL NOTE #3 ON SHEET 1 FOR MORE INFORMATION.

7. FOR HOLLOW BLOCK AND GROUT FILLED BLOCK, DO NOT INSTALL INSTALLATION ANCHORS INTO MORTAR JOINTS. EDGE DISTANCE IS MEASURED FROM FREE EDGE OF BLOCK OR EDGE OF MORTAR JOINT INTO FACE SHELL OF BLOCK.

8. INSTALLATION ANCHORS SHALL BE INSTALLED IN ACCORDANCE WITH ANCHOR MANUFACTURER'S INSTALLATION INSTRUCTIONS, AND ANCHORS SHALL NOT BE USED IN SUBSTRATES WITH STRENGTHS LESS THAN THE MINIMUM STRENGTH SPECIFIED BY THE ANCHOR MANUFACTURER.

ANCHOR SCHEDULE

METHOD	SUBSTRATE	ANCHOR TYPE	MIN EMBEDMENT	MIN. EDGE DISTANCE
STRAP	WOOD: MIN. SG = 0.55	#10 WOOD SCREW	1.50"	0.75"
	METAL: 18 GAUGE STEEL, MIN. Fy = 33KSI ALUMINUM: 1/8" MIN., 6063-T5	#10 SELF-DRILLING SCREW	3 THREADS MIN PENETRATION BEYOND STRUCTURE	0.50"
	CONCRETE: f'c=3000PSI	3/16" ITW TAPCON	1.25"	2.00"
	MASONRY: CMU per ASTM C90 MIN. 2000 PSI		1.00"	

DRUTEX
ENGINEERED FOR YOU
LESZKA GIERSZEWSKIEGO 1, 77-100
BYTOW, POLAND
PH: +48-59-822-9101 FX: +48-59-822-9103

TITLE: *IGLO EDGE TILT & TURN WINDOW (WZ3) (IMPACT)*
ANCHOR DETAILS, ANCHOR SCHEDULE, & INSTALLATION NOTES

PREPARED BY:
BUILDING DROPS, INC.
1900 NE MIAMI COURT, STE. 2-15
MIAMI, FL 33132
PH: (954)399-8478
FAX: (954)744.4738
WEB: www.buildingdrops.com
BUILDING DROPS

REMARKS	BY	DATE
2026 FBC UPDATE	LS	06/26

THE INSTALLATION DETAILS DESCRIBED HEREIN ARE GENERIC AND MAY NOT REFLECT ACTUAL CONDITIONS FOR A SPECIFIC SITE. IF SITE CONDITIONS CAUSE INSTALLATION TO DEVIATE FROM THE REQUIREMENTS DETAILED HEREIN, A LICENSED ENGINEER OR ARCHITECT SHALL PREPARE SITE SPECIFIC DOCUMENTS FOR USE WITH THIS DOCUMENT.

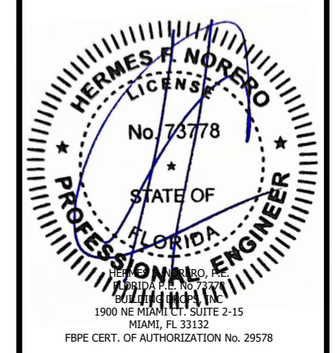

FL #: FL48218

DATE: 05.20.2026

DWG. BY: JR | CHK. BY: HFN

SCALE: NTS

DWG. #: DRU071

SHEET: 6 | REV. A

OF 6

7/13/2026 11:36 AM
c:\users\lucianosanchez\building drops, inc\building drops landing - documents\common\projects\2026 code change projects\drutex, s.a\cc-26-0527.1 - 2026 code change - 1711\dwgs\fl48218\dru071.dwg